1400

2018

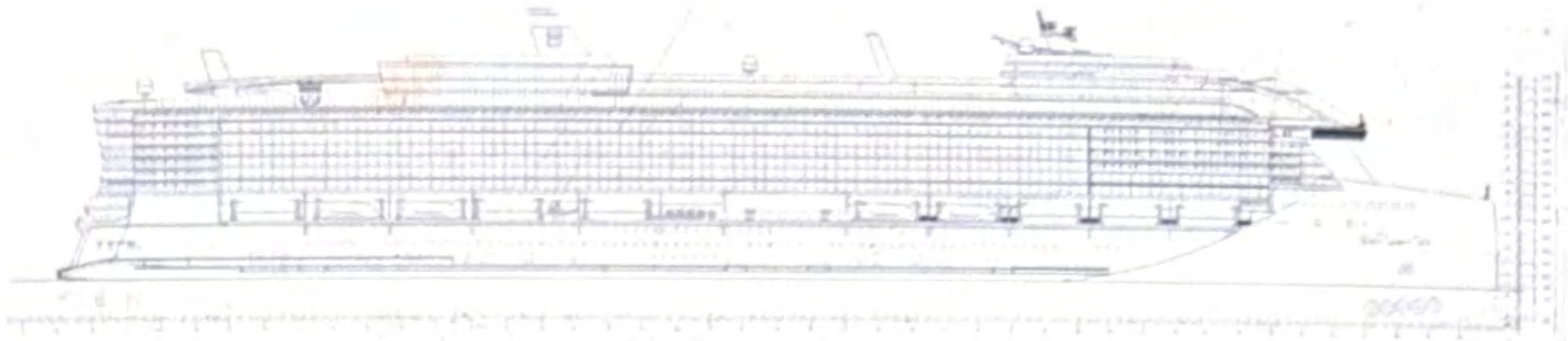

2019

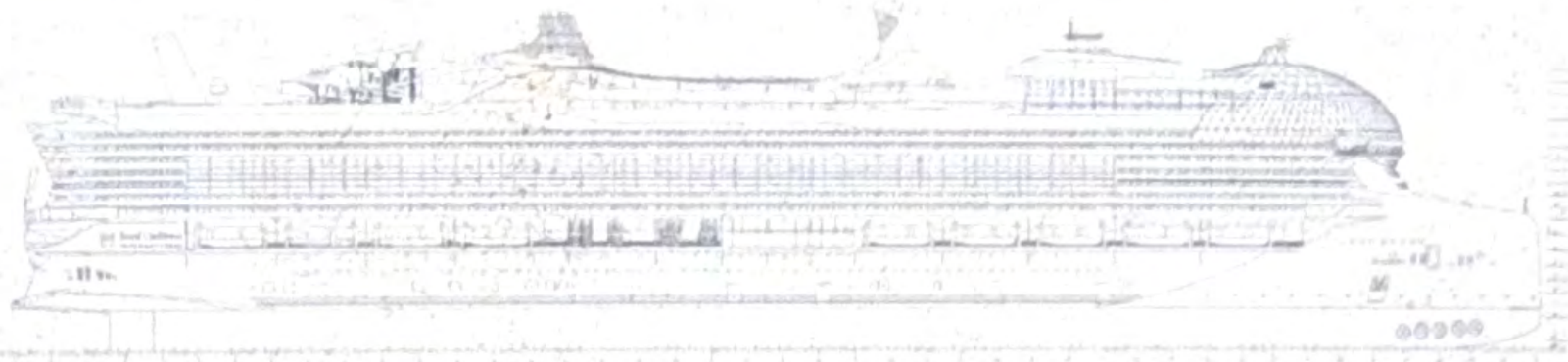

2020

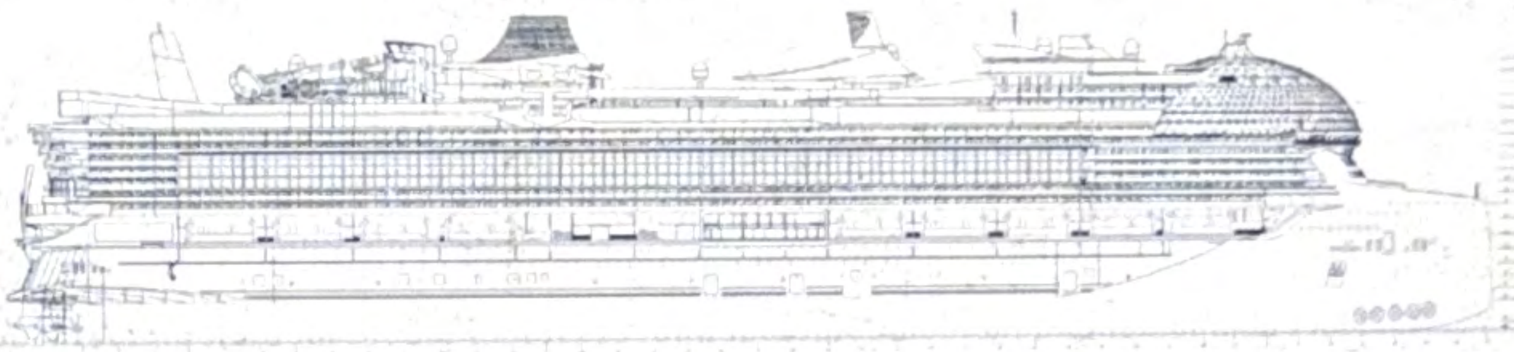

2021

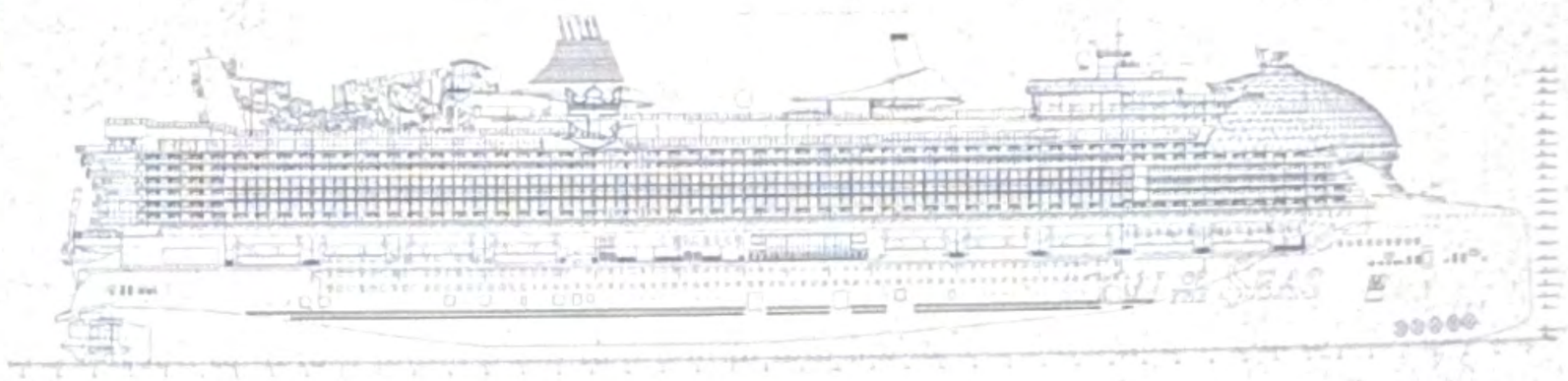

2023

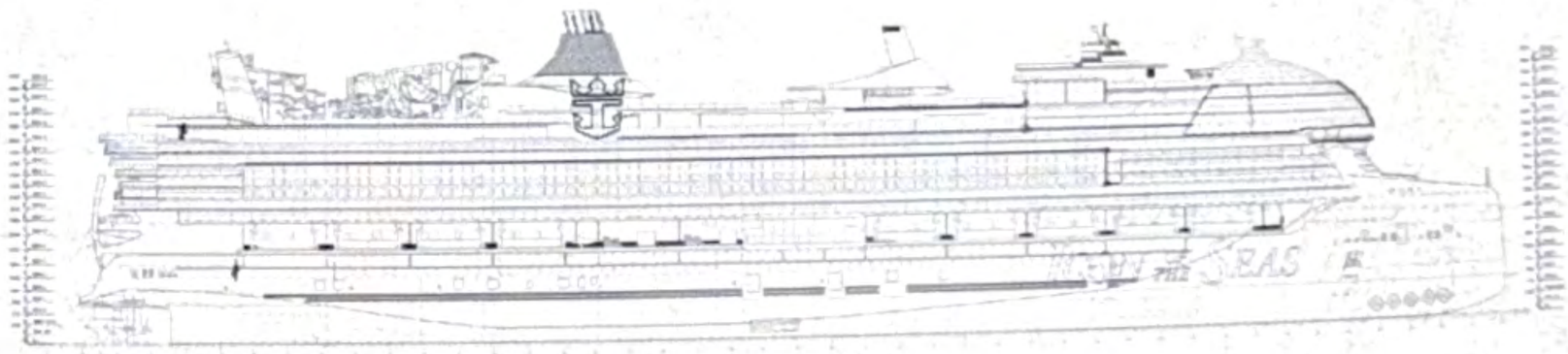

THE STORY OF 1400 LOBBY BAR

The 1400 Lobby Bar is dedicated to the pioneering spirit of innovation championed by Royal Caribbean. Its name pays homage to the first vessel of this iconic class, NB 1400, the shipyard designation for Icon of the Seas. The Icon Class is an achievement of over seven years of work and thousands of team members from around the world - all building something the industry has never seen before. Icon, and her sisters, are a testament to the enduring legacy of innovation that began in 1970 with the introduction of the Song of Norway.

The Beginning - Song of Norway

After Royal Caribbean was founded in 1968, the development of the first purpose-built cruise ship began. The Song of Norway was launched in 1970, boasting an innovative design specifically tailored for warm-weather cruising.

The Song of Norway, built in Helsinki, Finland, charted a new course for the industry, closing the doors on the age of ocean liners and ushering in the era of the modern cruise ship.

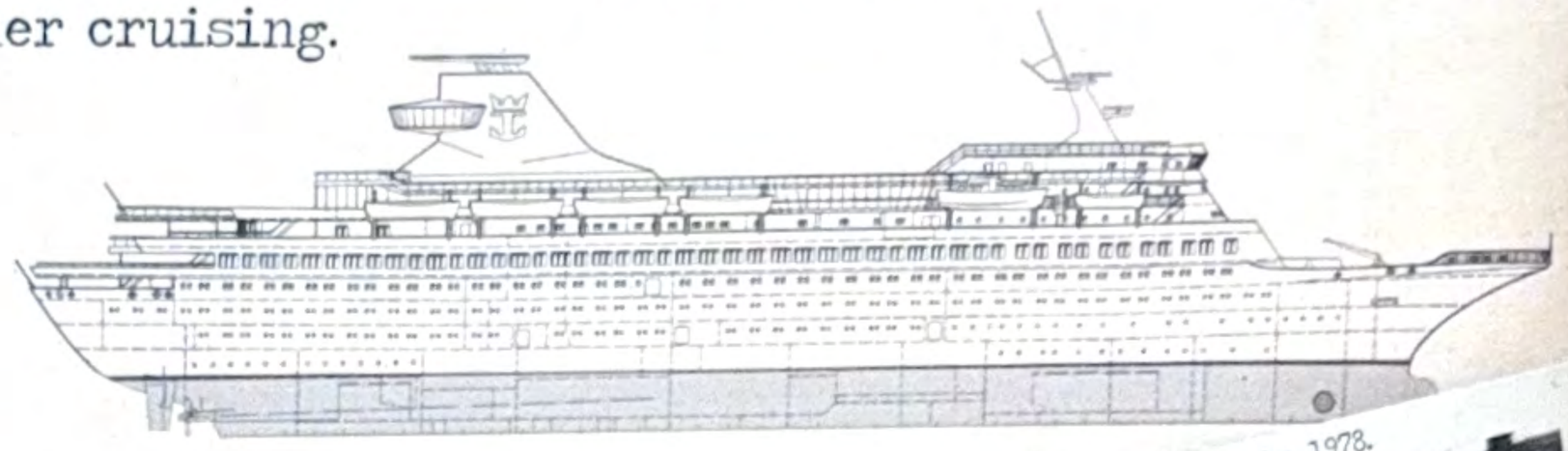

NB 392
The Song of Norway
Built 1970
Helsinki, Finland

NOTABLE FEATURES

Dedicated pool deck and sun decks

First Viking Crown Lounge



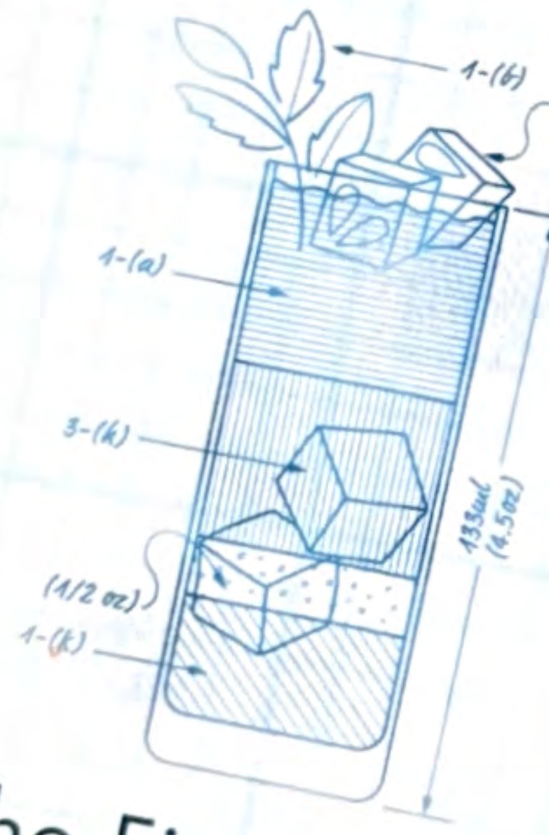

The First Song

Cásamigos Silver tequila, orange liqueur, watermelon juice and lemon sour

13

Viking's Crown

Pisco, lemon and pineapple juices and pineapple gum syrup

14

Growing Bigger - Song of America, the Sovereign Class

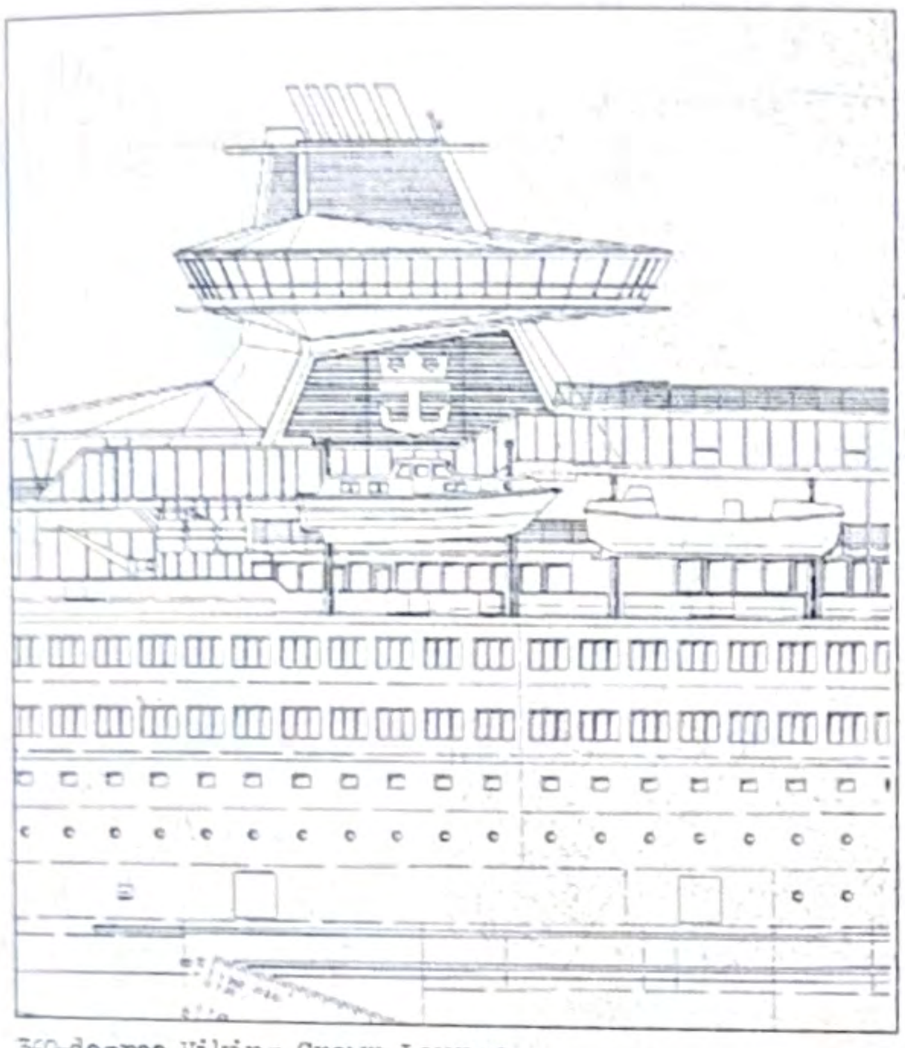

360-degree Viking Crown Lounge

In 1982, Royal Caribbean set sail with the Song of America, a ship larger than her sisters and featuring a redesigned Viking Crown Lounge positioned around the ship's funnel - a design so iconic that it lasts to this day and is featured by many in the Royal Caribbean fleet.

To continue its rapid expansion and growth, Royal Caribbean partnered with more builders throughout Europe. Working with the Saint-Nazaire shipyard in France, Royal Caribbean created the first mega-ship, Sovereign of the Seas.

NB 431

The Song of America
Built 1982
Helsinki, Finland

NOTABLE FEATURES

360-degree Viking Crown Lounge

Expansive Pool Deck





The Song of America

NB A-29

Sovereign of the Seas
Built 1987
Saint-Nazaire, France

NOTABLE FEATURES

The Centrum

Sail safely. Please drink responsibly. An 18% gratuity will be added for certain ports or itineraries. VAT may apply for certain ports or itineraries.

EUR.0626

The Millennium - Voyager Class

Voyager of the Seas (codename Project Eagle) was the largest cruise ship in the world at that time - built in Turku, Finland in 1999. It was the first to feature a central thoroughfare, the Royal Promenade, the heart of all energy and experiences onboard.

Voyager brought Royal Caribbean into the new millennium and set the new standard for cruising with the tag line, "Like no vacation on earth."

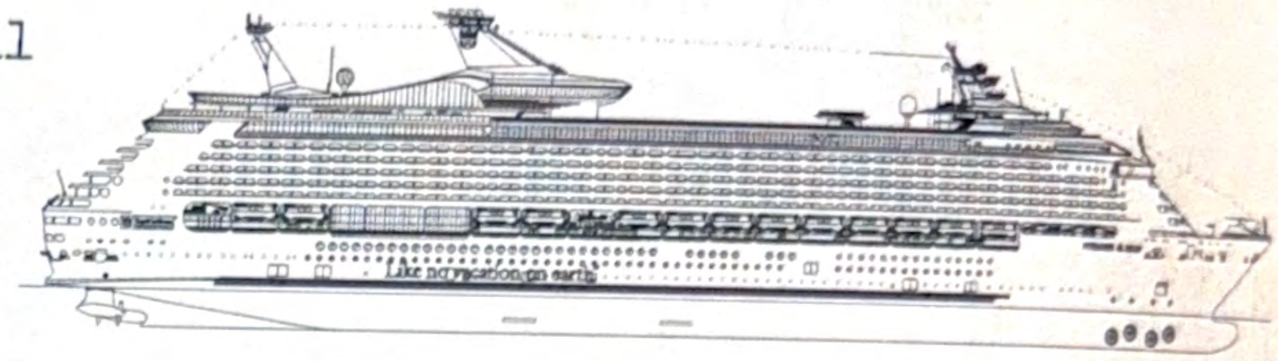

NB 1344

Voyager of the Seas
Built 1999 | Turku, Finland

NOTABLE FEATURES

The Royal Promenade

Studio B
the first ice skating rink at sea

On Air!

3-deck-high Main Dining Room

Inline skating rink

Mini-golf

Rock wall
the first at sea

A full basketball court

Adventure Beach
featuring our first waterslide at sea



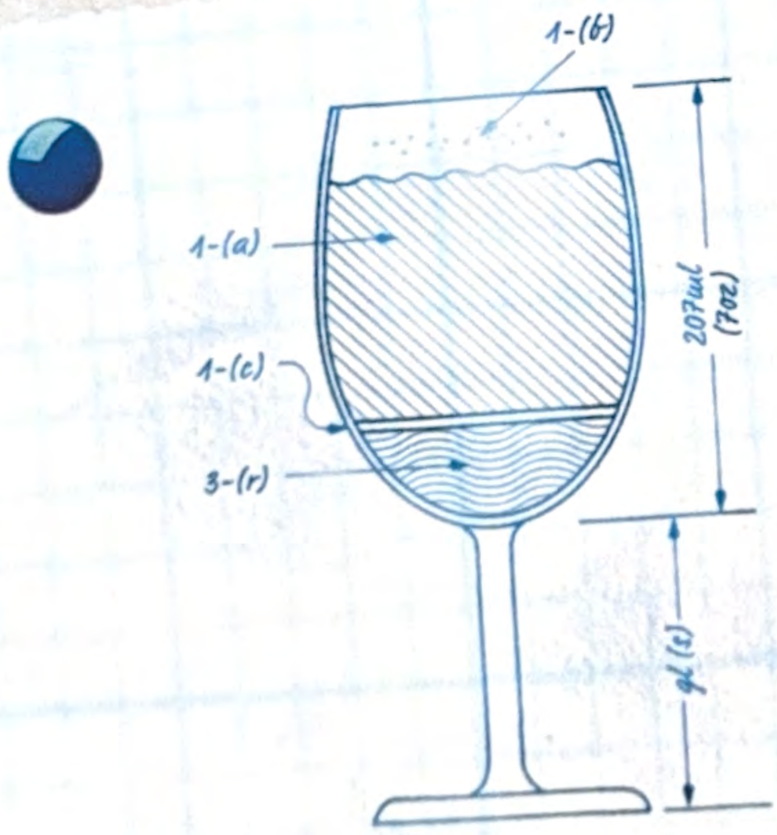

The Eagle

Courvoisier VS cognac, milk, vanilla and simple syrup with a sprinkle of nutmeg

14

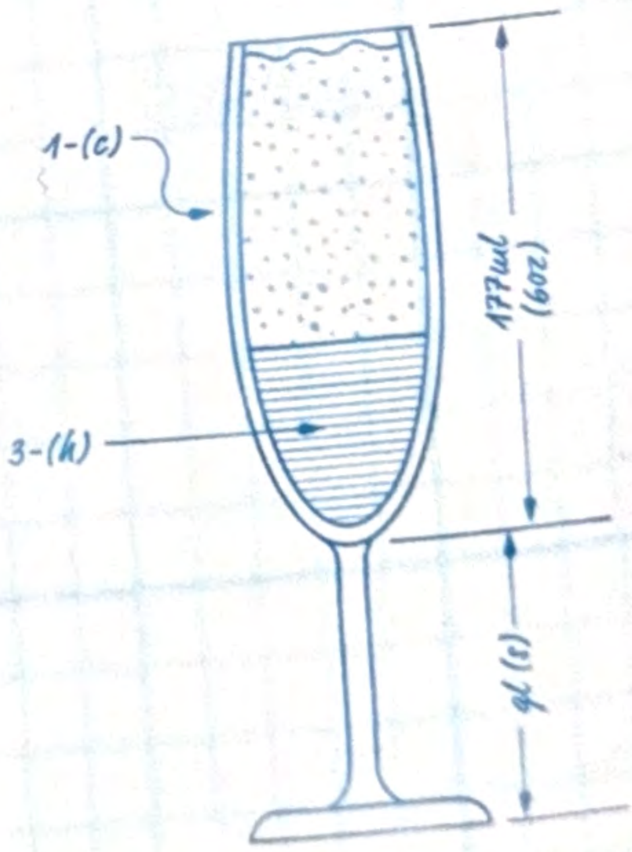

Millennium Bellini

Santa Elvira Prosecco and peach purée

13

The Era of Thrill - Freedom Class

Freedom of the Seas bears a striking resemblance to her older sisters, the Voyager Class, in terms of its structure, shape, and overall design. However, Freedom's secret is an additional 91 square feet of space dedicated to enhancing guest experiences and providing unexpected thrills.

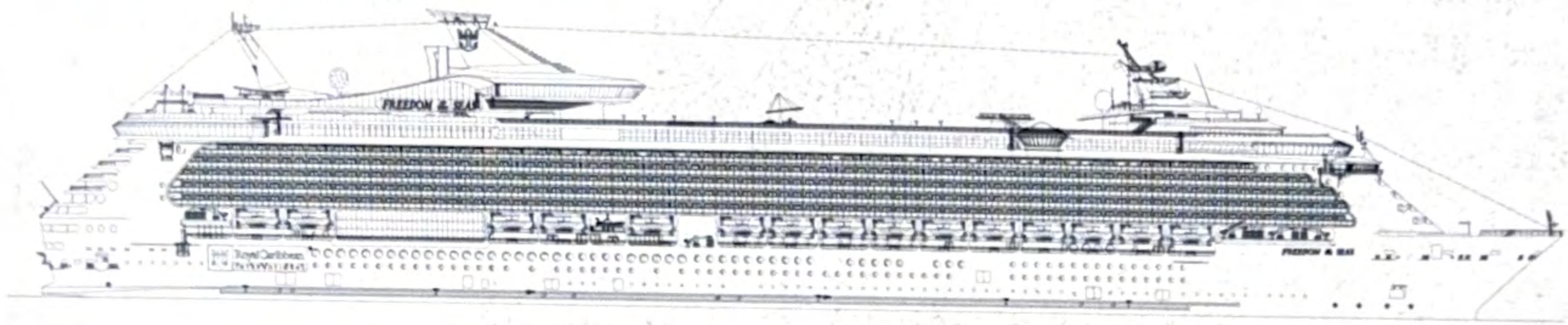

NB 1352

Freedom of the Seas
Built 2006
Turku, Finland

NOTABLE FEATURES

An expanded Royal Promenade

The FlowRider
the first surf simulator at sea

H2O Zone
the original Splashaway Bay

Cantilevered whirlpools

The first boxing ring at sea

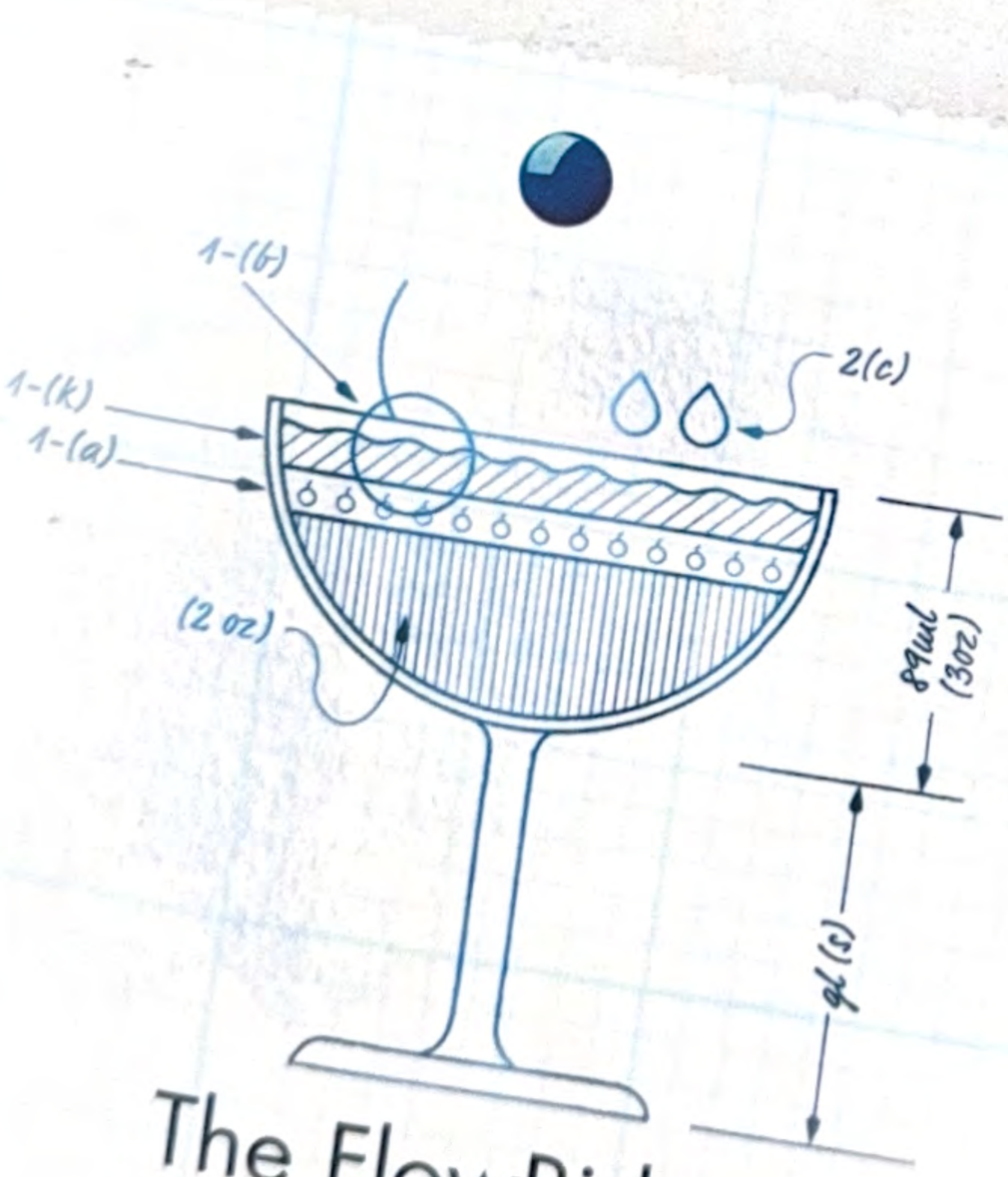

The FlowRider

Jack Daniel's Tennessee rye,
Heering cherry liqueur, Lillet Blanc and
Angostura orange bitters
12

FlowRider surf simulator



Sail safely. Please drink responsibly. An 13% gratuity will be added for certain ports or itineraries. VAT may apply for certain ports or itineraries.

EUR 0626

The Original Gamechanger - Oasis Class

The Oasis Class (codename Project Genesis) took the industry by storm when Oasis of the Seas was introduced in 2009. Oasis, and her sister Allure, redefined the playbook of a modern cruise ship, introducing jaw-dropping WOWs that have since become a staple for Royal Caribbean.

Oasis was the first cruise ship featuring a split superstructure, allowing for never-before-seen open-air atriums in more areas of the ship, providing designers with unprecedented opportunities for creativity and to innovate the guest experience.



First Carousel at Sea

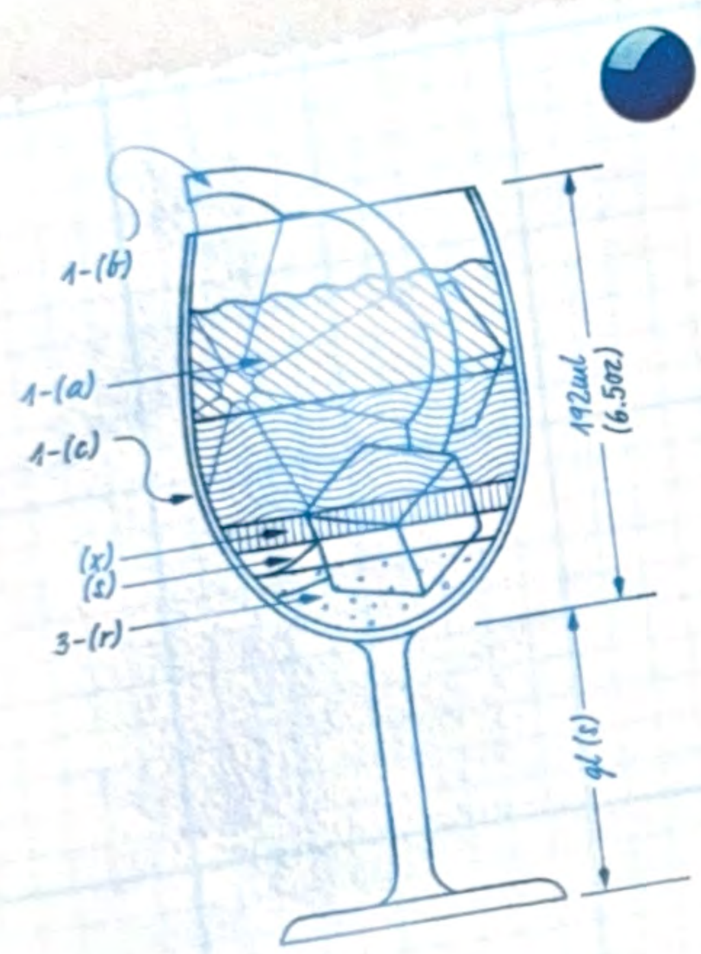

Pink Pony

Absolut Citron vodka, St-Germain Elderflower liqueur, Aperol, grapefruit juice and lemon sour

13

NOTABLE FEATURES

7 distinct neighborhoods, including

- Central Park
- Boardwalk

AquaTheater
the first at sea

Carousel
the first at sea

The Rising Tide Bar
the first moving bar at sea

- Dual FlowRiders
- Loft Suites
- Ultimate Abyss [later addition]
- The Perfect Storm
- Waterslides [later addition]
- Ultimate Family Suite [later addition]

NB 1363

Oasis of the Seas
Built 2009
Turku, Finland

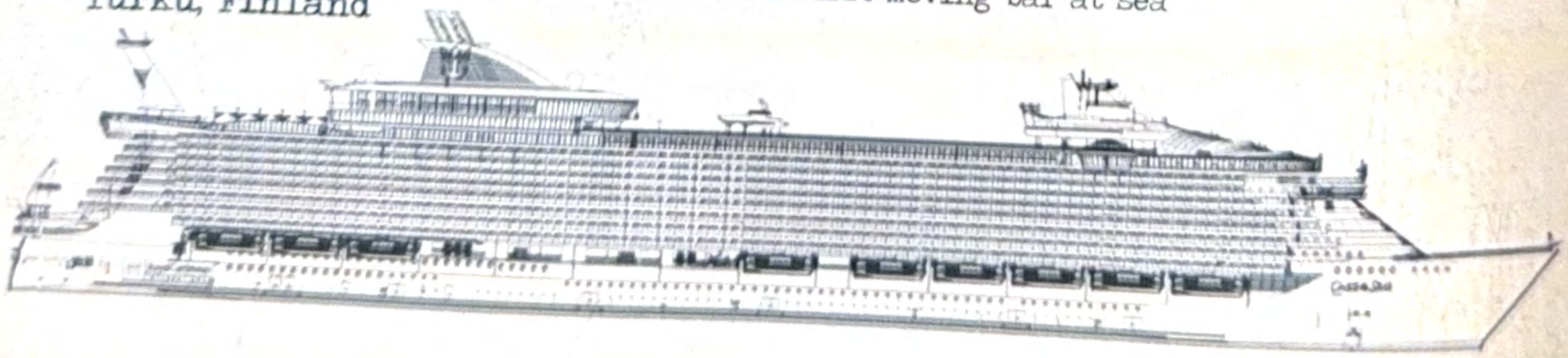



Central Park

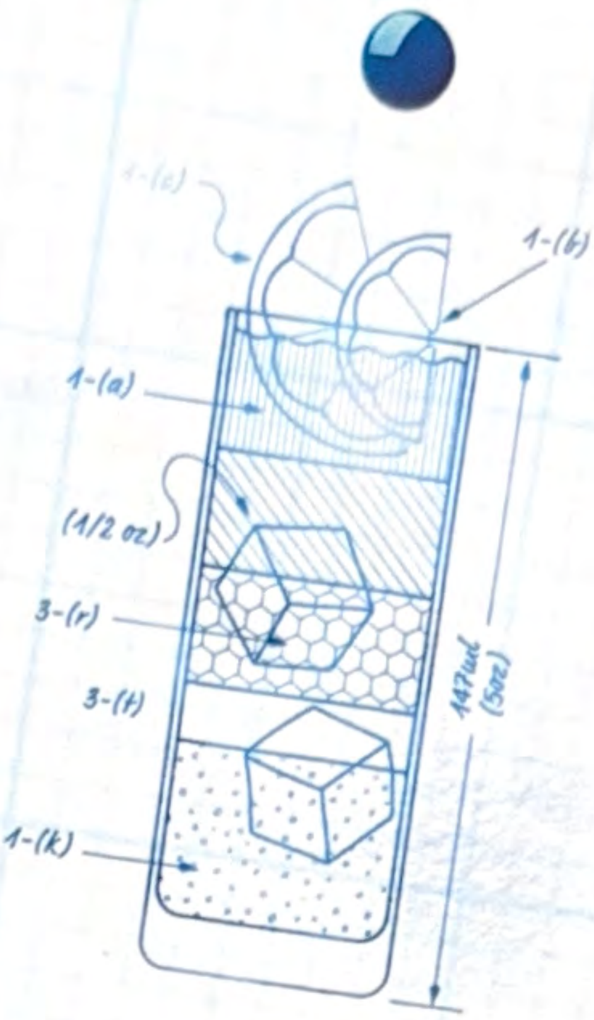

Living Garden

Ketel One Botanical Grapefruit &
Rose vodka, Aperol, honey syrup,
lemon and orange juice

14



Rising Tides

Bombay Sapphire gin, Lillet Blanc,
orange liqueur, absinthe and lemon sour

14



The Rising Tide Bar

Sail safely. Please drink responsibly. An 18% gratuity will be added for certain ports or itineraries. VAT may apply for certain ports or itineraries.

EUR 0626

The Smartest Ship - Quantum Class

Quantum of the Seas, Royal Caribbean International's smartest ship of the 21st century, made its debut in 2014. It boasts numerous futuristic firsts that are rarely seen, even on land.

This class was expanded in 2019 with the introduction of Quantum-Ultra ships, Spectrum of the Seas and Odyssey of the Seas, that added new experiences like the Skypad to this globetrotting ship class.

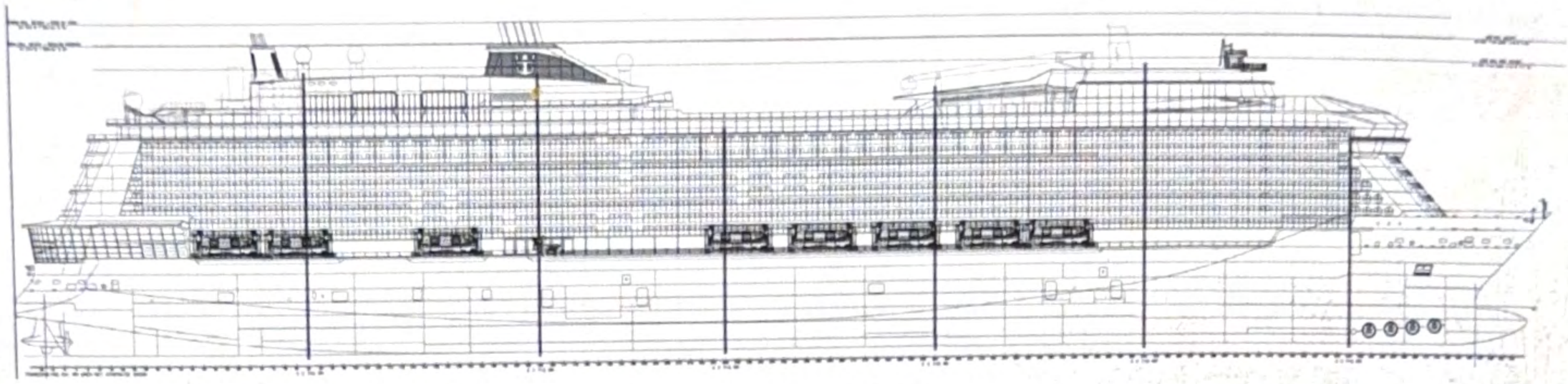

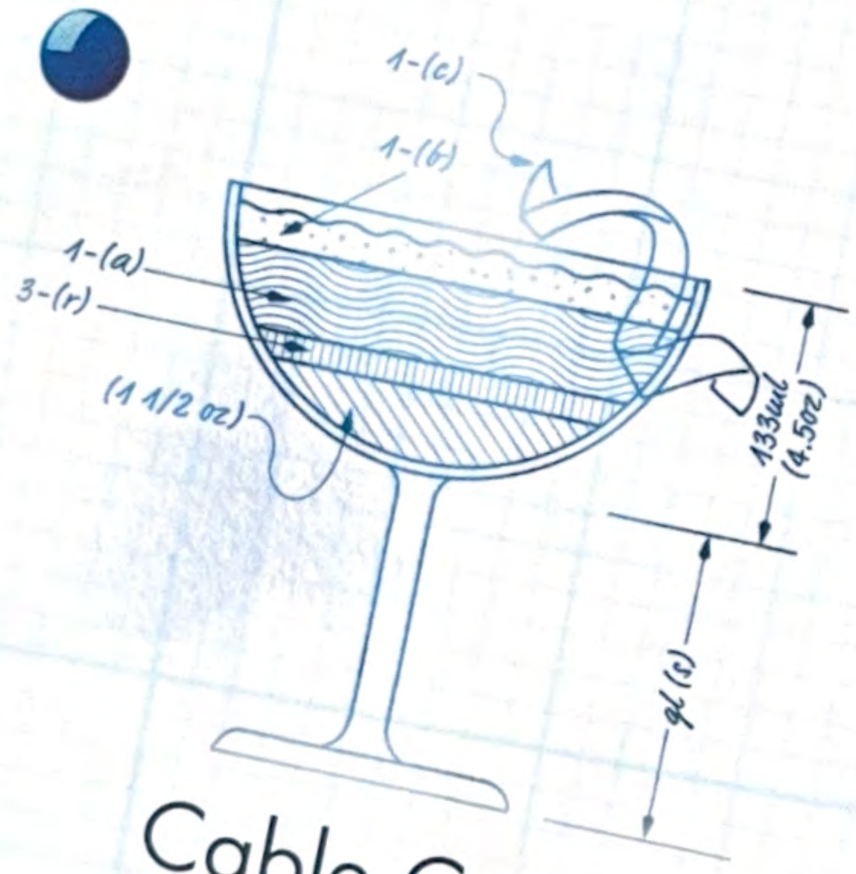

Cable Car

Captain Morgan's Original Spiced rum, orange curaçao, lemon sour and aquafaba with a cinnamon sugar rim

12

NB S-697

Quantum of the Seas
Built 2014
Papenburg, Germany

NOTABLE FEATURES

Bionic Bar
the first at sea

RipCord by iFLY
the first indoor skydiving at sea

The North Star
an elevated glass capsule
with 360° views - the first at sea

The SeaPlex
featuring the first bumper cars at sea

Two70
cutting-edge theater with a 270° view

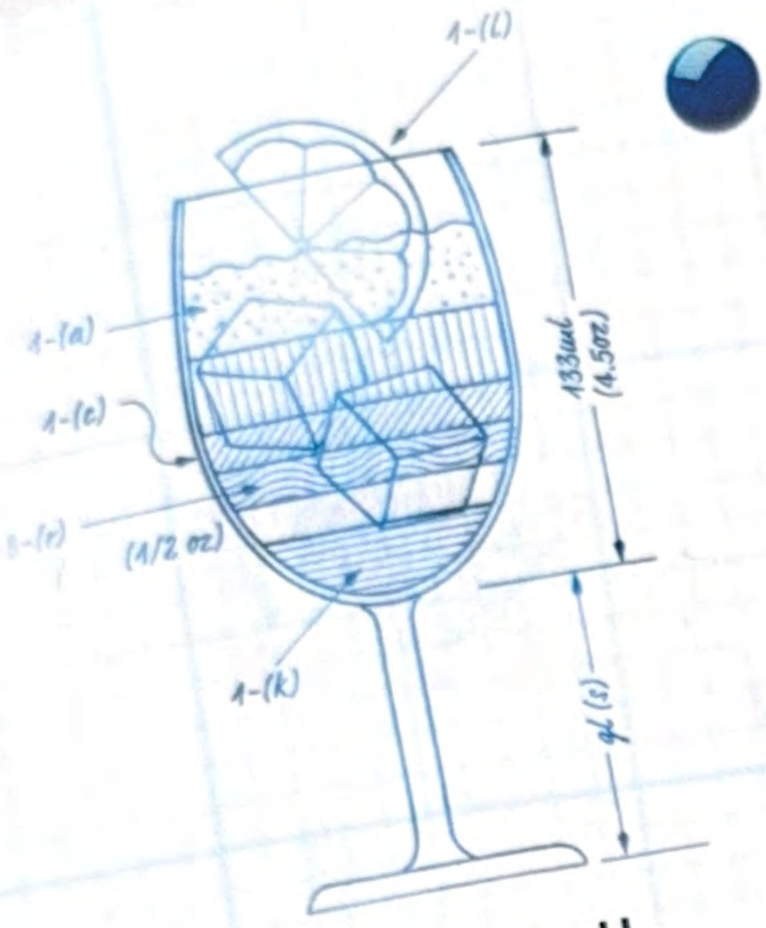

Free Fall

Ketel One Botanical Peach & Orange Blossom vodka, Campari, orange liqueur, blood orange purée, lemon sour and soda water

13

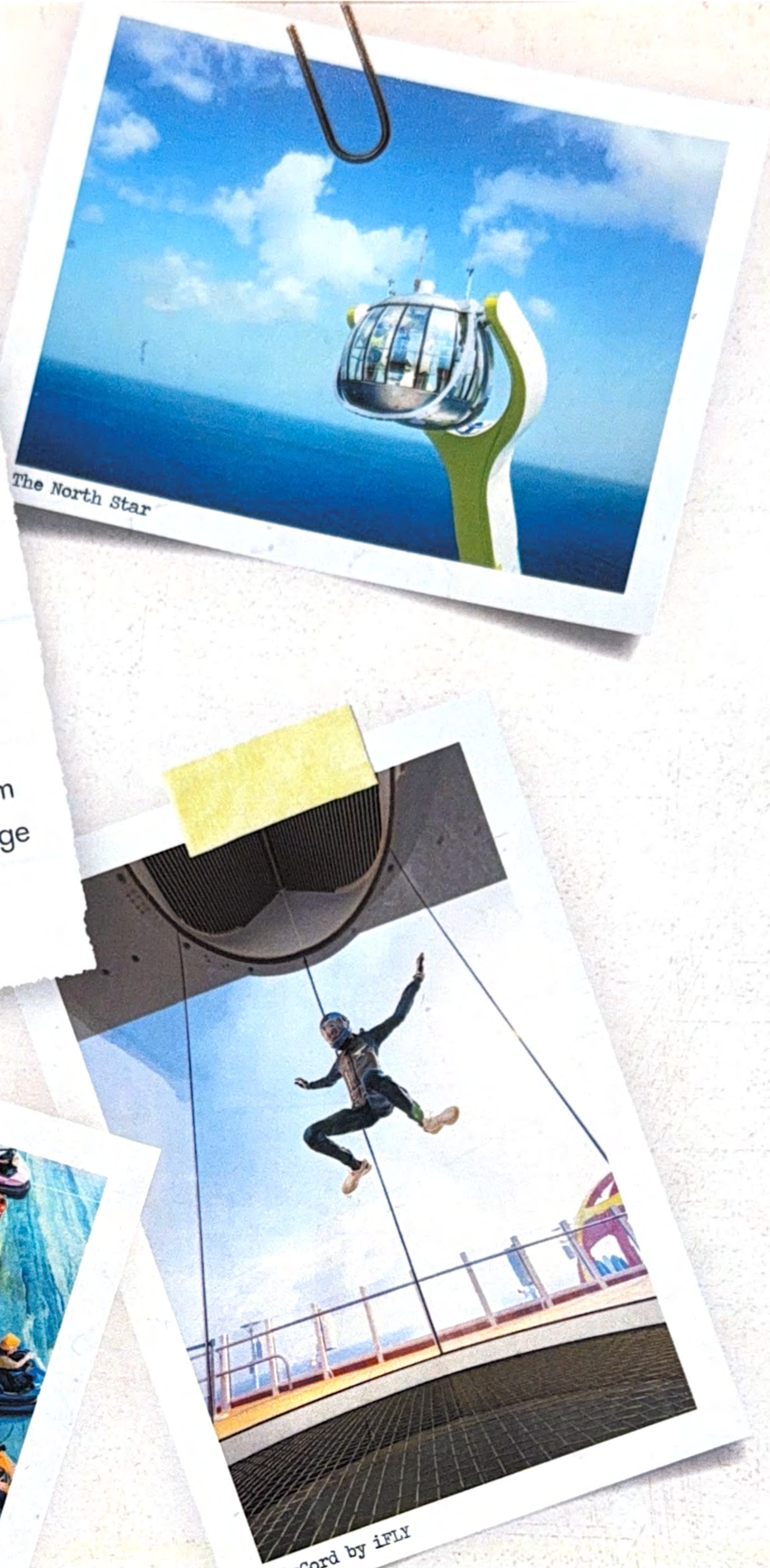
The North Star


The SeaPlex

RipCord by iFLY

Sail safely. Please drink responsibly. An 18% gratuity will be added for certain ports or itineraries. VAT may apply for certain ports or itineraries.

EUR.0626

The Future of Vacations - *Icon Class*

Icon of the Seas (Project ICON) set out to once again revolutionize the entire vacation industry. Icon brings together the best of resorts, theme parks, and our 50+ years of innovation to create the best family vacation on the planet. Like Icon, every ship in this class offers unparallelled experiences for each member of the family, with more firsts, biggests, and bests than ever before.

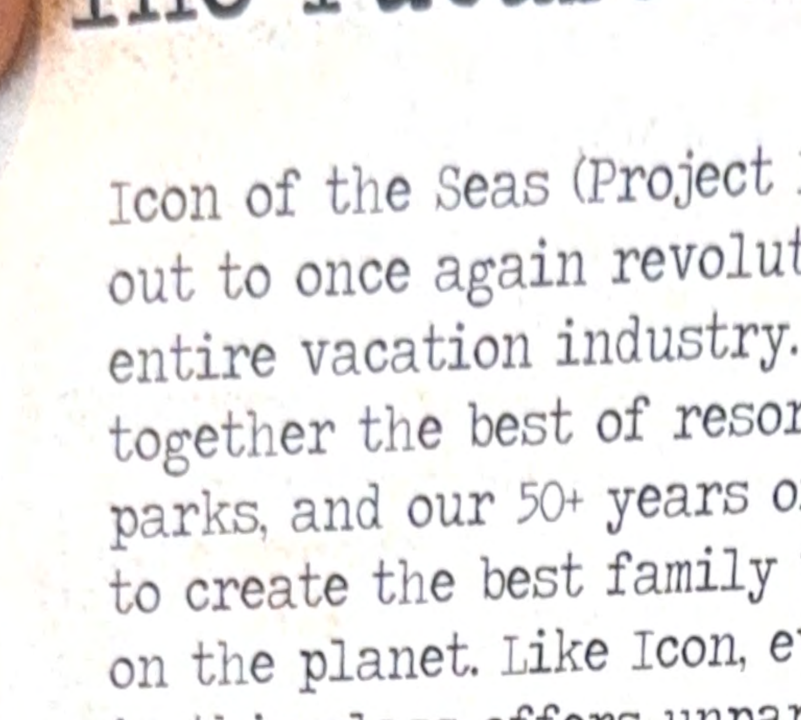



Iconic G&T

Bombay Sapphire gin mixed with our proprietary tonic developed by master mixologist Tony Abou-Ganim exclusively for Royal Caribbean



Surfside



The World's Largest Kinetic Sculpture

Sail safely. Please drink responsibly. An 18% gratuity will be
certain ports or itineraries. VAT may apply for certain ports or

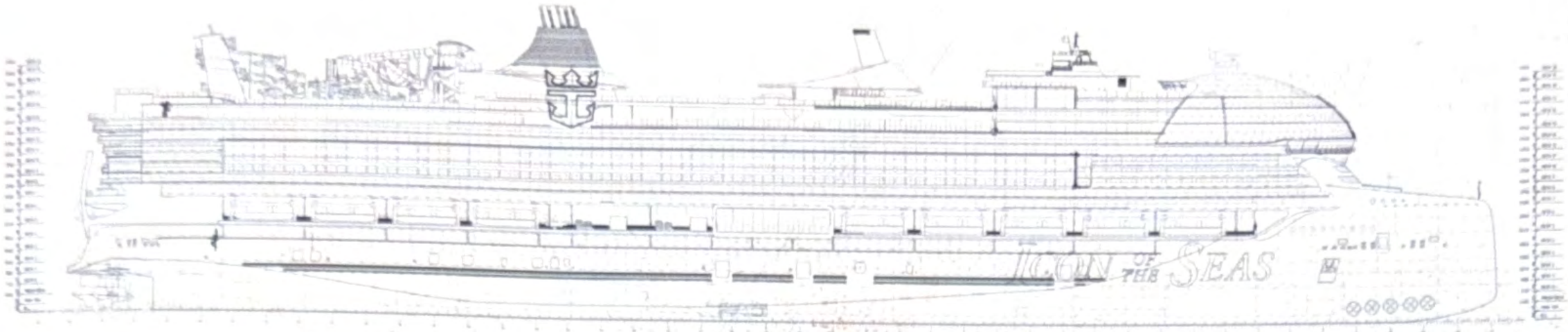

NOTABLE FEATURES

8 distinct neighborhoods, including

The AquaDome
the largest freestanding dome at sea

The Hideaway
featuring the first suspended infinity pool at sea

Thrill Island
first neighborhood dedicated to all things Thrill

Chill Island
featuring the largest pool at sea

Surfside
the first neighborhood created for young families

The Pearl
the world's largest kinetic sculpture

Category 6 Waterpark
the largest water park at sea

Crown's Edge
a first-of-its-kind thrilling over-water attraction

Ultimate Family Townhouse
the most fun stateroom in the fleet

Royal Bay
the largest pool at sea

The first LNG ship in the fleet

...And much more!

NB 1400

Icon of the Seas
Built 2023
Turku, Finland

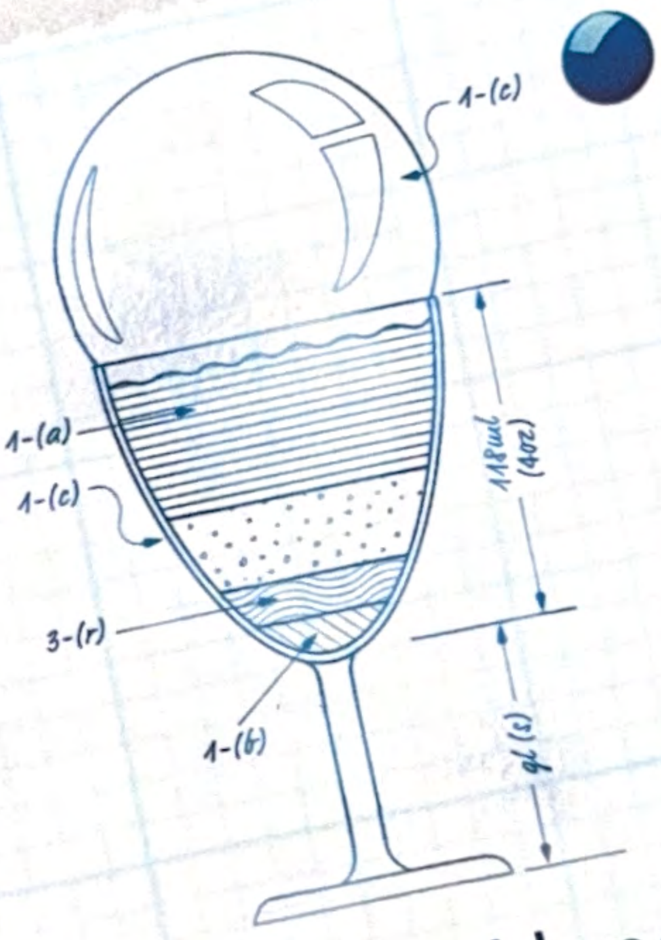

The Fourteen Hundred

Casamigos Blanco tequila, Italicus liqueur, pearl shimmer syrup and lemon sour with a citrus bubble

14


The World's Largest Kinetic Sculpture

Sail safely. Please drink responsibly. An 18% gratuity will be added for certain ports or itineraries. VAT may apply for certain ports or itineraries.

The Legend Lives On

For the first time in company history, Royal Caribbean brings a name out of retirement - Legend of the Seas.

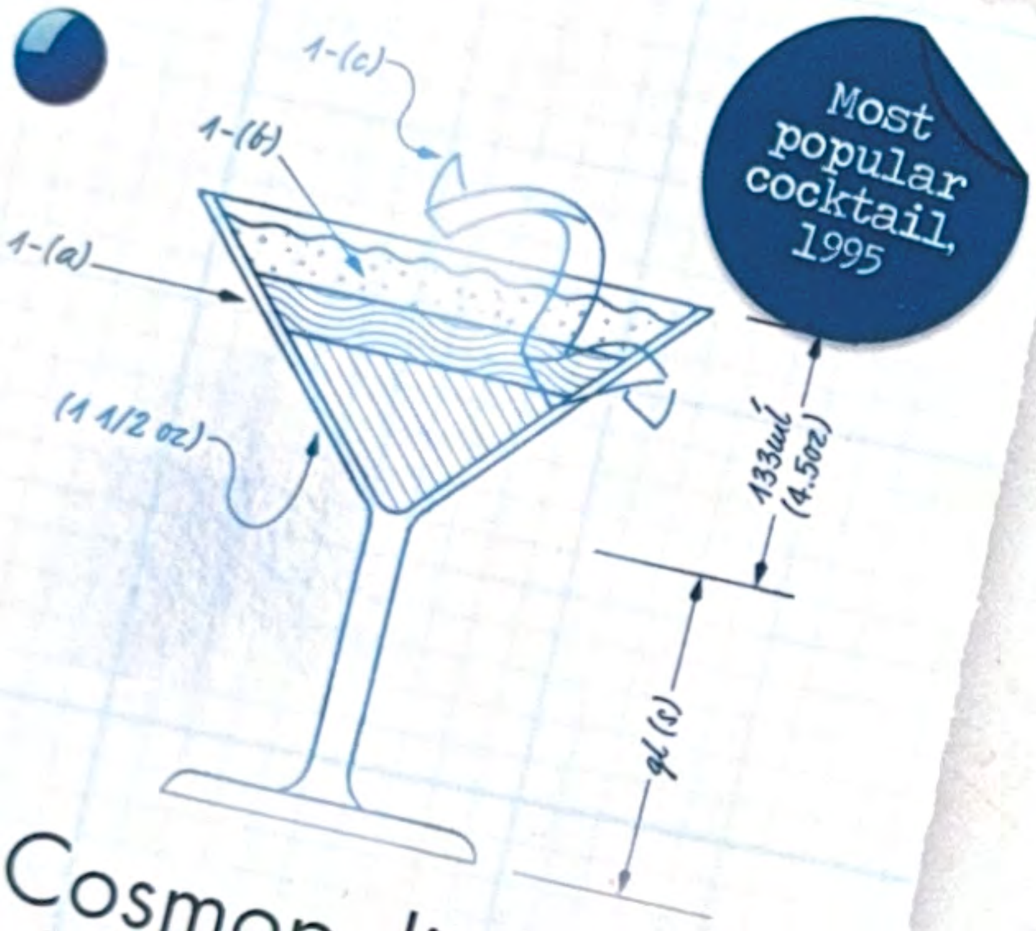

Cosmopolitan

Absolut Citron vodka, triple sec, cranberry juice and lime juice

11

NB A-31

Legend of the Seas

Built 1995

Saint-Nazaire, France

Launched in 1995 as the first in series of the Vision Class, the original Legend of the Seas followed the natural evolution of Royal Caribbean's Mega Cruise Ship strategy. At just over 69,000 gross tons, Legend was the first to feature an 18-hole mini golf course at sea as well as introduce Royal Caribbean's Solarium Pool.

Designed to visit new destinations far and wide, including Royal Caribbean's maiden call to Hawaii, she celebrated her maiden voyage with a transit through the Panama Canal.

NOTABLE FEATURES

Mini Golf Course
the first on a Royal Caribbean ship

Solarium
the first at sea

Multi-Deck Main Dining Room



Legend of the Seas, circa 1995

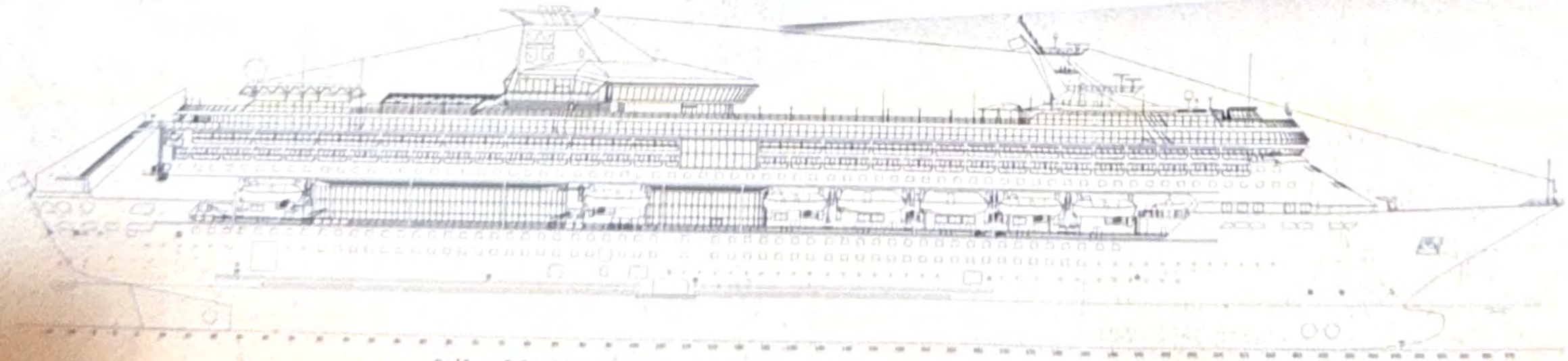

Sail safely. Please drink responsibly. An 18% gratuity will be added for certain ports or itineraries. VAT may apply for certain ports or itineraries.

Celebrating Legend of the Seas



Paper ~~Boat~~ Ship

Buffalo Trace bourbon,
Aperol, Heering cherry liqueur
and lemon juice

14



NB 1402

Legend of the Seas
Built 2026
Turku, Finland

NOTABLE FEATURES

Featuring the best of Icon Class, plus

Royal Railway
our immersive train experience debuts on Icon Class

Two-Deck Casino Royale
with more access to gaming

LED Crown & Anchor Logos
both sides of the ship shine brighter than ever

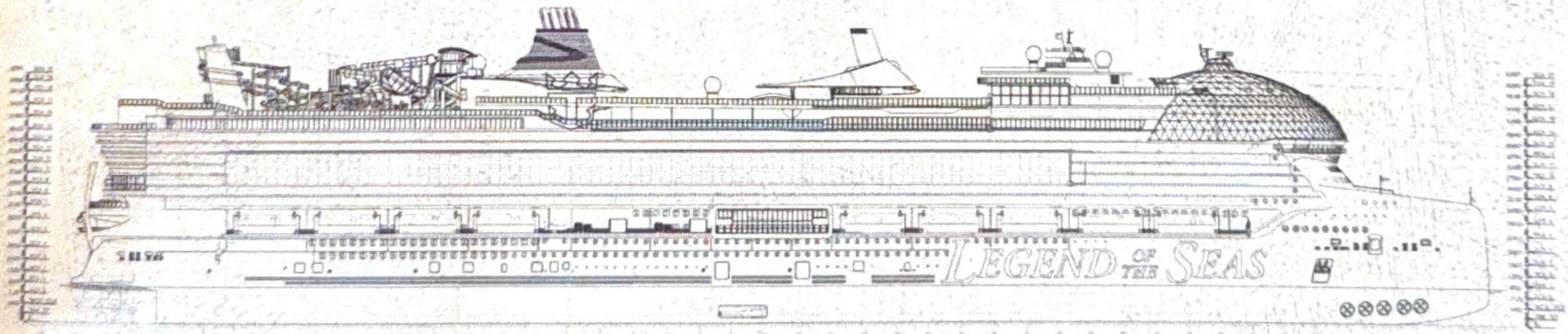

PROFILE SB

PROFILE SB

EUR.0626

Wine

Sparkling

		glass	bottle
223	Chandon, Brut "Classic" California, USA		58
325	Gérard Bertrand Esprit De Coté Des Roses Brut Rosé France	8	32
566	Gérard Bertrand Heritage Crémant Sparkling Brut Limoux, France	11	55
980	Santa Elvira, Prosecco Veneto, Italy		40

White/Rosé

295	Beringer, White Zinfandel California, USA	8	29
502	Château d'Esclans, Rosé Côtes de Provence, "Whispering Angel" Provence, France	14	55
343	Kim Crawford, Sauvignon Blanc Marlborough, New Zealand	12	54
248	Danzante, Pinot Grigio Delle Venezie, Italy	10	40
997	Prima Nature, Chardonnay Pays d'Oc, France	10	49

Red

499	Gérard Bertrand Coté Des Roses, Pinot Noir Languedoc, France	10	49
503	Terrazas de los Andes, Malbec Mendoza, Argentina	14	56
147	Robert Mondavi Private Selection, Merlot California, USA	10	35
687	Château d'Aussières, Cabernet Sauvignon, "Aussières," Vin de Pays d'Oc Languedoc, France	9	33
987	Murphy-Goode, Cabernet Sauvignon California, USA		42

Sail safely. Please drink responsibly. An 18% gratuity will be added for certain ports or itineraries. VAT may apply for certain ports or itineraries.

Beers & Others

Coors Light 7.49

Corona Extra 7.99

Heineken 7.99

Heineken 0.0 (Non-Alc) 6.99

Michelob Ultra 7.49

Peroni Nastro Azzurro 7.99

Truly Hard Seltzer 7.49
Wild Berry, Pineapple or Strawberry Lemonade

Twisted Tea Hard Iced Tea 7.49

White Claw Hard Seltzer 7.49
Mango



Zero Proof

Non-Alcoholic

Coconut Lime Refresher 7
Lime juice, lemonade,
coconut syrup and mint

Tiger's Tale 7
Lemon juice, coconut syrup,
watermelon syrup, club soda, mint,
strawberry and watermelon

Passion Starlight 7
Lemon juice, pineapple juice,
lemonade, passion fruit syrup
and mint

Blueberry Nojito 7
Blueberry purée, lime juice,
simple syrup and mint



EUR.0626

Behind the Recipes



The cocktails for 1400 Lobby Bar were developed by Modern Mixologist's Tony Abou-Ganim, one of the world's leading bar professionals and author of *The Modern Mixologist - Contemporary Classic Cocktails.*



The Fourteen Hundred cocktail

Building an Icon



The first sea trials



The Pearl under construction



Construction walkthroughs with teams from Royal Caribbean Group and Meyer Turku



The coin ceremony



Construction in December 2022



Icon in drydock



The steel cutting ceremony